Work Order ID 59933

Thursday, June 17, 2010 12:56:30 PM

Item ID: D212-580-041 **Accept** **Setup Start** **Stop**

Revision ID:

Item Name: Cargo Mirror Assembly

Start Date: 6/17/2010 **Start Qty:** 4.00 **Cust Item ID:**

Required Date: 6/24/2010 **Req'd Qty:** 4.00 **Customer:**

Reference:

Run Start **Stop**

Approvals: **Process Plan:** N **Date:** 10-6-17 **Tooling:** _____ **Date:** _____

QC: _____ **Date:** _____ **SPC (Y/N):** _____ **Date:** _____

Draw Nbr	Revision Nbr
D2161	Rev B2

Sequence ID/ Work Center ID	Operation Description	Set Up/ Run Hours	Tool ID	Tool #	Plan Code	Accept Qty	Reject Qty	Reject Number	Insp. Stamp
100	DOCUMENT CONTROL	0.00							
DC	**Memo**	0.00							
Document Control	Photocopy bluefile and create labels as per PPP D212-580-041 CHG003								
110	Large Fab	0.00							
Large Fab	**Memo**	0.00							
Large Fab	1-Assemble on Jig DT8065 as per Dwg D2161□2-Weld as per Dwg D2161Identify as D2161-212□A/R SS ROD Batch: M108160								
120	QC5- Inspect part completeness to step on W/O	0.00							
QC	**Memo**	0.00							
Quality Control									

for BG 10/06/29

10/06/29

10-6-28 X4

10/06/28

Dart Aerospace Ltd

W/O:		WORK ORDER CHANGES					
DATE	STEP	PROCEDURE CHANGE	By	Date	Qty	Approval Chief Eng / Prod Mgr	Approval QC Inspector

Part No: _____ **PAR #:** _____ **Fault Category:** _____ **NCR:** Yes No **DQA:** _____ **Date:** _____

Resolution: _____ **Disposition:** _____ **QA: N/C Closed:** _____ **Date:** _____

NCR:		WORK ORDER NON-CONFORMANCE (NCR)						
DATE	STEP	Description of NC Section A	Corrective Action Section B			Verification Section C	Approval Chief Eng	Approval QC Inspector
			Initial Chief Eng	Action Description Chief Eng	Sign & Date			

NOTE: Date & initial all entries

H:\fFORMS\Quality Assurance\approved QA\NCRWO RevE

Work Order ID 59933

Thursday, June 17, 2010 12:56:30 PM

Item ID: D212-580-041
Revision ID:
Item Name: Cargo Mirror Assembly
Start Date: 6/17/2010 **Start Qty:** 4.00
Required Date: 6/24/2010 **Req'd Qty:** 4.00
Reference:

Accept

Cust Item ID:
Customer:

Setup Start / Stop

Run Start / Stop

Approvals: **Process Plan:** _____ **Date:** _____ **Tooling:** _____ **Date:** _____
QC: _____ **Date:** _____ **SPC (Y/N):** _____ **Date:** _____

Sequence ID/ Work Center ID	Operation Description	Set Up/ Run Hours	Tool ID	Tool #	Plan Code	Accept Qty	Reject Qty	Reject Number	Insp. Stamp
130	QC9- Inspect visual per QSI004- Fusion Welds	0.00							
QC	Memo	0.00				(4)	PD	10.06.28	
Quality Control									
140	Black Sandtex(Ref:4.3.5.7) per QSI005 4.3	0.00							
Powdercoat	M112588. Memo	0.00							
Powder Coating	START TIME: 3:20 ☐OVEN TEMPERATURE: 320° ☐FINISH TIME: 3:00					(4)	[illegible]	10-6-28.	
150	QC3- Inspect Part Finish	0.00							
QC	Memo	0.00							
Quality Control									

=> M 10/06/28

Dart Aerospace Ltd

W/O:		WORK ORDER CHANGES					
DATE	STEP	PROCEDURE CHANGE	By	Date	Qty	Approval Chief Eng / Prod Mgr	Approval QC Inspector

Part No: _____ **PAR #:** _____ **Fault Category:** _____ **NCR:** Yes No **DQA** _____ **Date:** _____

Resolution: _____ **Disposition:** _____ **QA: N/C Closed:** _____ **Date:** _____

NCR:		WORK ORDER NON-CONFORMANCE (NCR)						
DATE	STEP	Description of NC Section A	Corrective Action Section B			Verification Section C	Approval Chief Eng	Approval QC Inspector
			Initial Chief Eng	Action Description Chief Eng	Sign & Date			

NOTE: Date & initial all entries

H:\fFORMS\Quality Assurance\approved QA\NCRWO RevE

Work Order ID 59933

Thursday, June 17, 2010 12:56:30 PM

Item ID: D212-580-041 **Accept** **Setup** **Start** **Stop**

Revision ID:

Item Name: Cargo Mirror Assembly

Start Date: 6/17/2010 **Start Qty:** 4.00 **Cust Item ID:**

Required Date: 6/24/2010 **Req'd Qty:** 4.00 **Customer:**

Reference:

Approvals: **Process Plan:** _____ **Date:** _____ **Tooling:** _____ **Date:** _____ **Run** **Start** **Stop**

QC: _____ **Date:** _____ **SPC (Y/N):** _____ **Date:** _____

Sequence ID/ Work Center ID	Operation Description	Set Up/ Run Hours	Tool ID	Tool #	Plan Code	Accept Qty	Reject Qty	Reject Number	Insp. Stamp
160	Pick Kit	0.00				10-6-29		42	
Packaging	Memo	0.00							
Packaging									
170	QC4- 100% Inspect kits for completeness	0.00 S 10/06/29				54			
QC	Memo	0.00							
Quality Control									
180	Packaging	0.00				10-6-29		42	
Packaging	Memo	0.00							
Packaging	Identify and pack for shipping as per PPP D212--580-041 ☐Location: 24 ☐PPP Rev: G								

Dart Aerospace Ltd

W/O:		WORK ORDER CHANGES					
DATE	STEP	PROCEDURE CHANGE	By	Date	Qty	Approval Chief Eng / Prod Mgr	Approval QC Inspector

Part No: _____ **PAR #:** _____ **Fault Category:** _____ **NCR:** Yes No **DQA** _____ **Date:** _____

Resolution: _____ **Disposition:** _____ **QA: N/C Closed:** _____ **Date:** _____

NCR:		WORK ORDER NON-CONFORMANCE (NCR)						
DATE	STEP	Description of NC Section A	Corrective Action Section B			Verification Section C	Approval Chief Eng	Approval QC Inspector
			Initial Chief Eng	Action Description Chief Eng	Sign & Date			

NOTE: Date & initial all entries

H:\fFORMS\Quality Assurance\approved QA\NCRWO RevE

Dart Aerospace Ltd

W/O:		WORK ORDER CHANGES					
DATE	STEP	PROCEDURE CHANGE	By	Date	Qty	Approval Chief Eng / Prod Mgr	Approval QC Inspector

Part No: _____ PAR #: _____ Fault Category: _____ NCR: Yes No DQA _____ Date: _____

Resolution: _____ Disposition: _____ QA: N/C Closed: _____ Date: _____

NCR:		WORK ORDER NON-CONFORMANCE (NCR)						
DATE	STEP	Description of NC Section A	Corrective Action Section B			Verification Section C	Approval Chief Eng	Approval QC Inspector
			Initial Chief Eng	Action Description Chief Eng	Sign & Date			

NOTE: Date & initial all entries

H:\fFORMS\Quality Assurance\approved QA\NCRWO RevE

Picklist Print

Thursday, June 17, 2010 12:56:34 PM

Work Order ID: 59933

Parent Item: D212-580-041

Parent Item Name: Cargo Mirror Assembly

Start Date: 6/17/2010 **Required Date:** 6/24/2010

Start Qty: 4.00 **Required Qty:** 4.00

Comments: IPP Rev:H Removed D2013-3/-4 06-03-22 JLM

Component Item ID/ Item Name	Replacement Item ID	Mfg/ Purch	Bin Item	Primary Location	Last Location	Route Seq ID	Unit of Measure	Qty on Hand	Qty per Kit	Total Qty	Qty Issued	Date Issued	Status
MS27039-1-08 Screw		Purchased	No			100	Each	1,427.000	4	16	10-6-29		
				Location		Loc Qty		Loc Code					
				ST291		1427							
					110552	44							
					110835	1183							
					114718	200							
D2013-3 Mirror Bracket LH, 212		Manufactured	No	B60053 x4		110	Each	0.0000	1	4	EL 10-6-28		
D2013-4 Mirror Bracket RH, 212		Manufactured	No	B60054 x4		110	Each	0.0000	1	4	EL 10-6-28		
CCR264SS3-2 Rivet, Cherry		Purchased	No			170	Each	208.0000	4	16	10-6-29		
				Location		Loc Qty		Loc Code					
				ST311		208							
					106578	45							
					108738	63				16			
					112314	100							
D2011-103 8" Mirror		Manufactured	No			170	Each	46.0000	2	8	B32198 (2x)	10-6-29	
				Location		Loc Qty		Loc Code					
				ST226		46							
					58399	46				bx			

Dart Aerospace Ltd

W/O:		WORK ORDER CHANGES					
DATE	STEP	PROCEDURE CHANGE	By	Date	Qty	Approval Chief Eng / Prod Mgr	Approval QC Inspector

Part No: _____ **PAR #:** _____ **Fault Category:** _____ **NCR:** Yes No **DQA:** _____ **Date:** _____

Resolution: _____ **Disposition:** _____ **QA: N/C Closed:** _____ **Date:** _____

NCR:		WORK ORDER NON-CONFORMANCE (NCR)						
DATE	STEP	Description of NC Section A	Corrective Action Section B			Verification Section C	Approval Chief Eng	Approval QC Inspector
			Initial Chief Eng	Action Description Chief Eng	Sign & Date			

NOTE: Date & initial all entries

H:\fFORMS\Quality Assurance\approved QA\NCRWO RevE

Picklist Print

Thursday, June 17, 2010 12:56:34 PM

Work Order ID: 59933

Parent Item: D212-580-041

Parent Item Name: Cargo Mirror Assembly

Start Date: 6/17/2010 **Required Date:** 6/24/2010

Start Qty: 4.00 **Required Qty:** 4.00

D2037-101	Manufactured	No		170	Each	4.0000	1	4	
Arm								EL	10-6-28

Location		Loc Qty	Loc Code
WA		4	
	52272	4	

4

MS21059L3	Purchased	No		170	Each	96.0000	2	8	
Nut Plate								10-6-29	sf 40

Location		Loc Qty	Loc Code
ST301		85	
	114718	85	
ST302		11	
	113749	10	
	114456	1	

8

Dart Aerospace Ltd

W/O:		WORK ORDER CHANGES					
DATE	STEP	PROCEDURE CHANGE	By	Date	Qty	Approval Chief Eng / Prod Mgr	Approval QC Inspector

Part No: _____ **PAR #:** _____ **Fault Category:** _____ **NCR:** Yes No **DQA:** _____ **Date:** _____

Resolution: _____ **Disposition:** _____ **QA: N/C Closed:** _____ **Date:** _____

NCR:		WORK ORDER NON-CONFORMANCE (NCR)						
DATE	STEP	Description of NC Section A	Corrective Action Section B			Verification Section C	Approval Chief Eng	Approval QC Inspector
			Initial Chief Eng	Action Description Chief Eng	Sign & Date			

NOTE: Date & initial all entries

H:\fFORMS\Quality Assurance\approved QA\NCRWO RevE

SHOP COPY
RETURN TO
ENGINEERING
UNCONTROLLED COPY
SUBJECT TO AMENDMENT
WITHOUT NOTICE
WORK ORDER
NO. 59933
RS 10-6-17

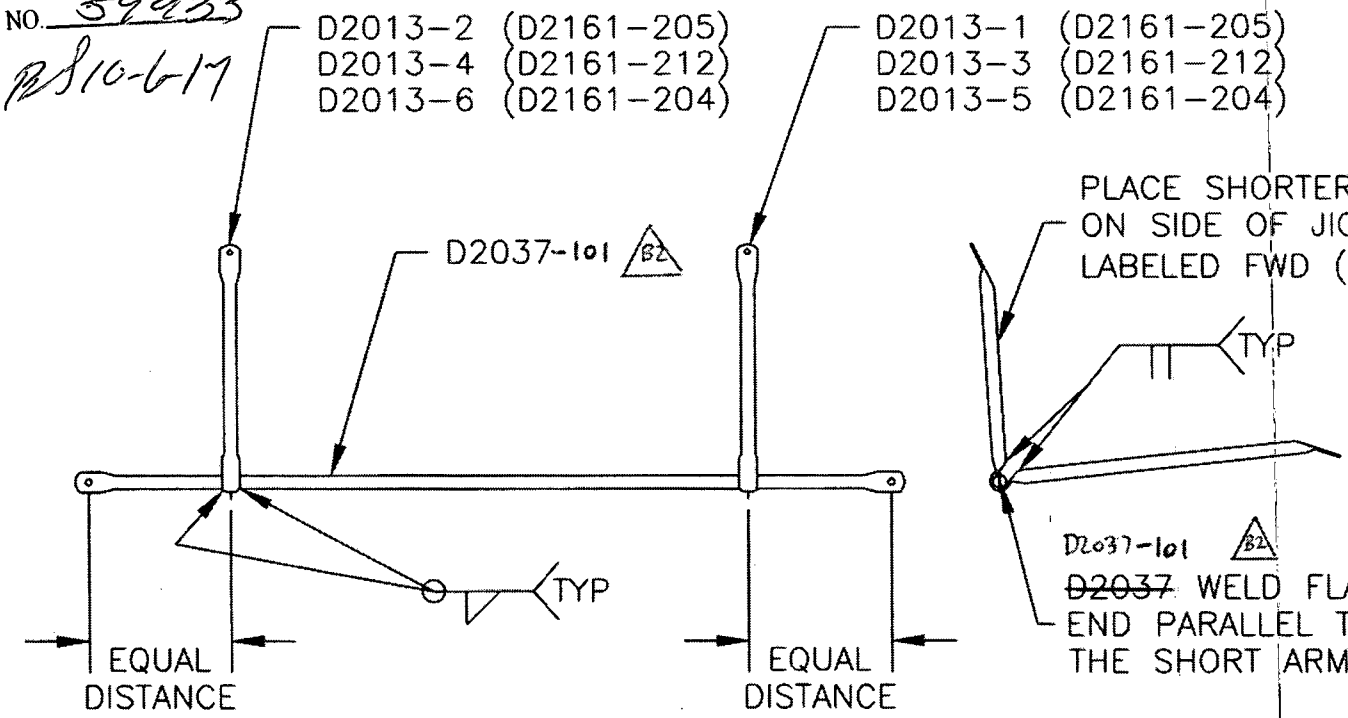

DETAIL OF D2161-204
DETAIL OF D2161-205
DETAIL OF D2161-212

NOTE: WELD ASSEMBLY
USING JIG DT8065

FINISH: ~~POWDER COAT ASSEMBLY BLACK~~
~~CRINKLE (4.3.5.3) PER DART QSI 005 4.3~~
POWDER COAT BLACK SANDTEX (4.3.5.7) PER
DART QSI 005 4.3 B1

B1	02.03.25	CHANGE FINISH	
B2	02.06.14	D2037-101 WAS	
B	99.06.07	REDRAWN FOR CLARITY ADDED -204/-205/-212 DESIGNATIONS	
A	93.04.29	NEW ISSUE	

RELEASED
KE 99.06.10

DESIGN: JB
DRAWN BY: RT
CHECKED: KE
APPROVED:
DATE: 99.06.07

DART AEROSPACE LTD
HAWKESBURY, ONTARIO, CANADA

DRAWING NO. D2161
REV. B
TITLE: MIRROR BRACKET
SHEET 1 OF 1
SCALE: NTS

Dart Aerospace Ltd

W/O:		WORK ORDER CHANGES					
DATE	STEP	PROCEDURE CHANGE	By	Date	Qty	Approval Chief Eng / Prod Mgr	Approval QC Inspector

Part No: _____ **PAR #:** _____ **Fault Category:** _____ **NCR:** Yes No **DQA:** _____ **Date:** _____

Resolution: _____ **Disposition:** _____ **QA: N/C Closed:** _____ **Date:** _____

NCR:		WORK ORDER NON-CONFORMANCE (NCR)						
DATE	STEP	Description of NC Section A	Corrective Action Section B			Verification Section C	Approval Chief Eng	Approval QC Inspector
			Initial Chief Eng	Action Description Chief Eng	Sign & Date			

NOTE: Date & initial all entries

H:\fFORMS\Quality Assurance\approved QA\NCRWO RevE

4.0 WEIGHT AND BALANCE

Installation	Weight	LATERAL		LONGITUDINAL	
		Arm	Moment	Arm	Moment
D204-562-041 Dual Mirror Installation	5.0 lb 2.3 kg	0 in 0 m	0 lb-in 0 kg-m	3.80 in 0.10 m	19.0 in-lb 0.23 m-kg
D205-563-041 Dual Mirror Installation	5.0 lb 2.3 kg	0 in 0 m	0 lb-in 0 kg-m	3.80 in 0.10 m	19.0 in-lb 0.23 m-kg
D212-580-041 Dual Mirror Installation	5.0 lb 2.3 kg	0 in 0 m	0 lb-in 0 kg-m	-5.25 in -0.13 m	-26.3 in-lb -0.30 m-kg

5.0 PARTS LIST

Qty 562 -041	Qty 563 -041	Qty 580 -041	Part Number	Description
X			**D204-562-041**	**DUAL MIRROR INSTALLATION**
	X		**D205-563-041**	**DUAL MIRROR INSTALLATION**
		X	**D212-580-041**	**DUAL MIRROR INSTALLATION**
2	2	2	D2011-103	MIRROR
1			D2161-204	MIRROR BRACKET
	1		D2161-205	MIRROR BRACKET
		1	D2161-212	MIRROR BRACKET
*2	*2	*2	D3015-3	LOCKNUT
*2	*2	*2	AN960JD516	WASHER
		4	CCR264SS-3-2	RIVET, BLIND
		2	MS21059L3	NUTPLATE
4	4	4	MS27039-1-08	SCREW

* PARTS ARE INCLUDED WITH D2011-103 MIRROR